RESISTOR COLOR CODE

COLOR	FIRST BAND	SECOND BAND	MULTIPLIER	TOLERANCE
BLACK		0	$10^0 = 1$	
BROWN	1	1	$10^1 = 10$	
RED	2	2	$10^2 = 100$	
ORANGE	3	3	$10^3 = 1000$	
YELLOW	4	4	$10^4 = 10000$	
GREEN	5	5	$10^5 = 100000$	
BLUE	6	6	$10^6 = 1000000$	
VIOLET	7	7	$10^7 = 10000000$	
GREY	8	8	$10^8 = 100000000$	
WHITE	9	9	$10^9 = 1000000000$	
GOLD			$10^{-1} = 0.1$	5%
SILVER			$10^{-2} = 0.01$	10%
NO COLOR				20%

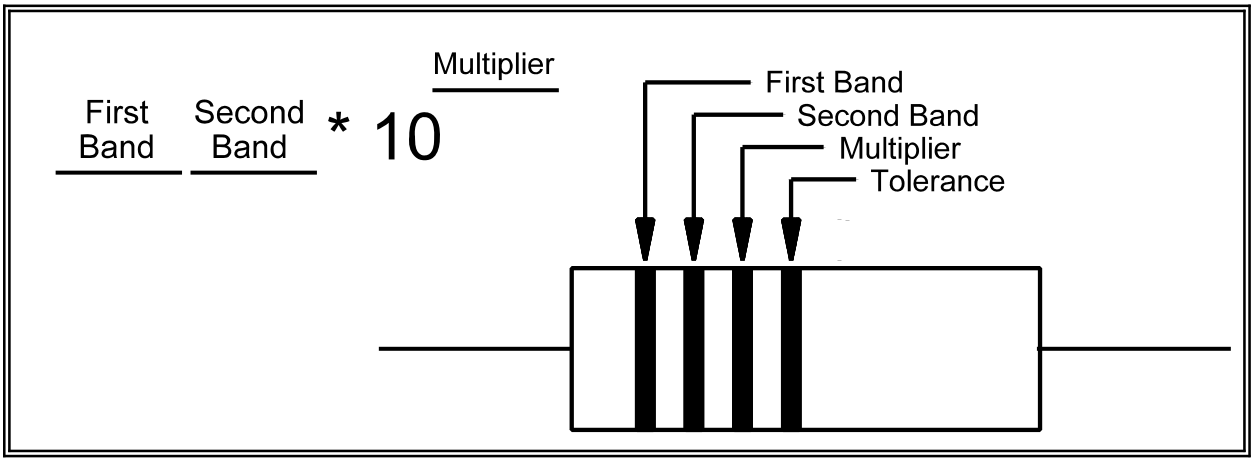

NOTE: **When resistors have a value less than 10Ω, the third color band is a decimal multiplier. The colors are gold (x 0.1), and silver (x 0.01).**

NO RESISTOR STARTS WITH THE COLOR BLACK.

Better **B**e **R**eady **O**r **Y**our **G**reat **B**ig **V**enture **G**oes **W**rong, **G**o **S**tudy **N**ow

Bad **B**eer **R**ots **O**ur **Y**oung **G**uts **B**ut **V**odka **G**oes **W**ell, **G**et **S**mashed **N**ow